9635

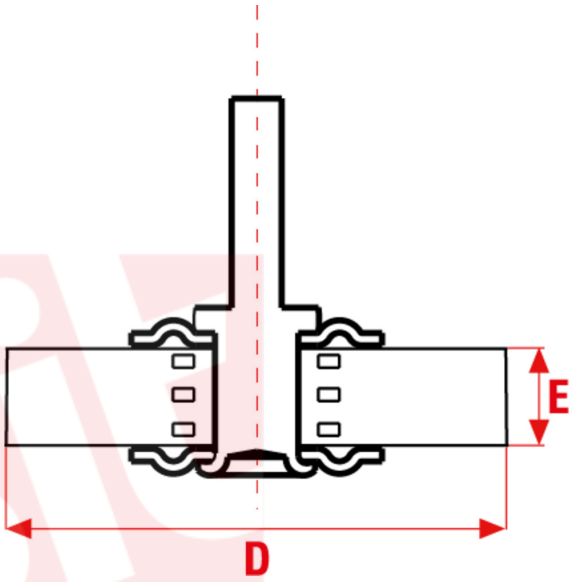

Shank-mounted wheel brushes made of highly resistant crimped wire with high wire density. They ensure long service life and great performance in various industrial processes. Suitable to be mounted onto fix machines and machining centres. GG wheel brushes are engineered for heavy-duty applications and with higher rotation speed. They allow you to reach the desired result in less time and with increased aggressiveness. They can be mounted on air tools as well.

TYPE OF USE

To remove slags, rust and processing waste from surfaces of any material and shape.

MM	
D mm	100
E mm	9
Shank mm	6X25
Max RPM	10000
CO/IS pach	12 /96
Art.	GG102
Filament	LIZ steel cord
Ø Filament	0,25mm

INCH	
D inch	4
E inch	3/8
Shank inch	1/4X1
Max RPM	10000
CO/IS pack	12 /96
Art.	GG102
Filament	LIZ steel cord
Ø Filament	0,010″

Le dimensioni, le illustrazioni, le caratteristiche tecniche, le referenze e tutti gli altri dati contenuti nel catalogo possono essere modificati da SIT senza preavviso. Tutte le dimensioni riportate sul catalogo sono da considerarsi nominali e, se non diversamente specificato, sono in mm. Diametri, sporgenze e spessori degli insiemi di filamenti, costituenti le spazzole, sono da considerare tali solo approssimativamente.
The dimensions, illustrations, technical characteristics and all other data contained in the catalogue may be changed by SIT without prior notice. All dimensions on the catalogue, unless otherwise specified, are in mm. Diameters, protrusions and thicknesses of sets of filaments forming the brushes are only approximate.

SIT Società Italiana Tecnospazzole S.p.A

C.F. e Reg. Imprese 03492470376
Via Porrettana, 453
40033 - Casalecchio di Reno (Bo)
ITALY

Partita I.V.A./VAT IT00626581201
Codice SDI: A4707H7
Import/Export BO 008277
R.E.A. BO 295504

Tel. +39 0516113211
Fax +39 051574319
PEC: sit_tecnospazzole@legalmail.it
info@sitbrush.com

INDUSTRIAL BRUSHES MANUFACTURER
WITH QUALITY MANAGEMENT SYSTEM
CERTIFIED ISO 9001
sitbrush.com